H1-D Wiring Diagram

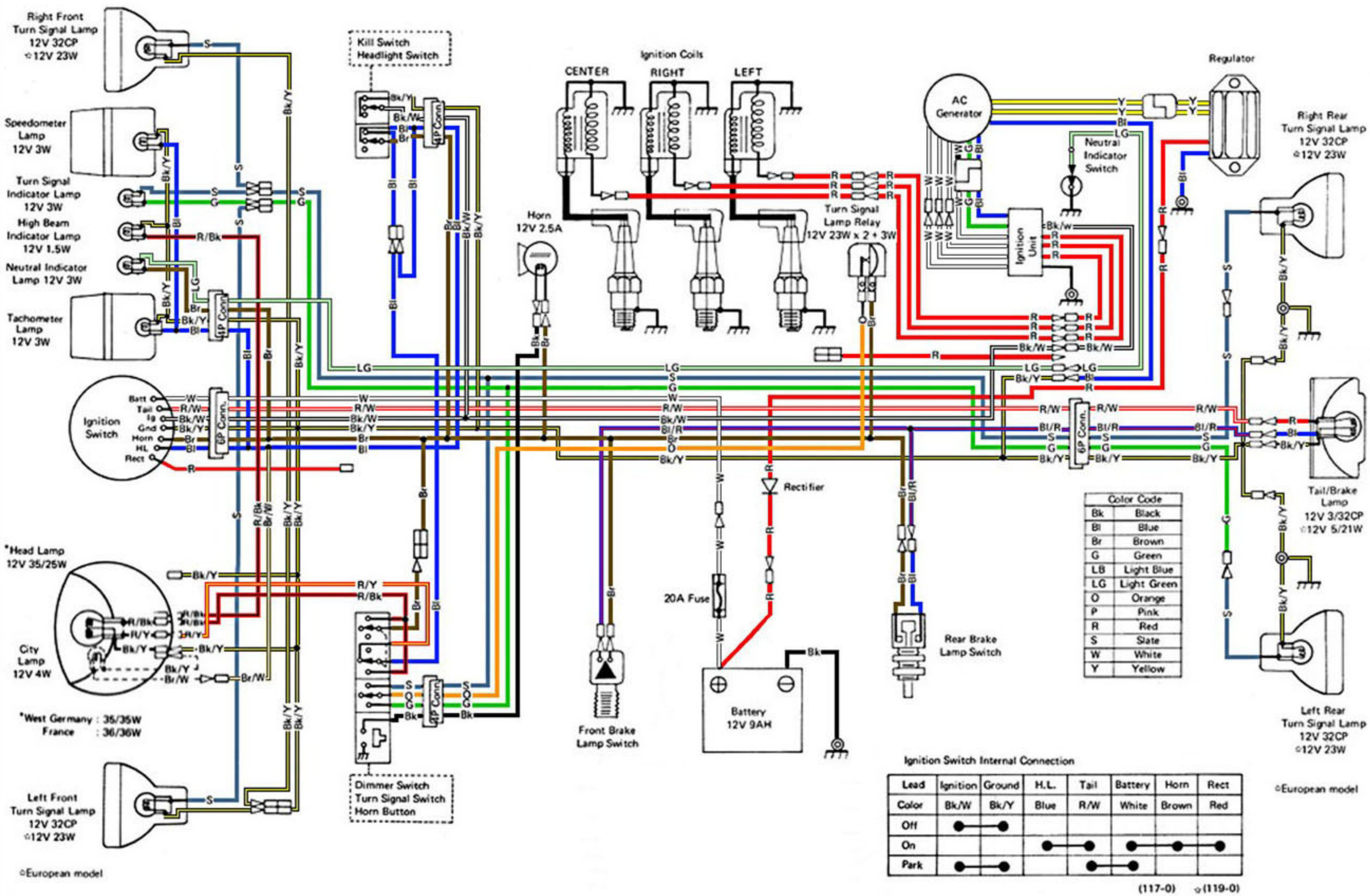

Color Code	
Bk	Black
Bl	Blue
Br	Brown
G	Green
LB	Light Blue
LG	Light Green
O	Orange
P	Pink
R	Red
S	Slate
W	White
Y	Yellow

Ignition Switch Internal Connection

Lead	Ignition	Ground	H.L.	Tail	Battery	Horn	Rect
Color	Bk/W	Bk/Y	Blue	R/W	White	Brown	Red
Off	●	●					
On			●	●	●	●	●
Park	●	●		●	●		

(117-0) ☆(119-0)